REVISIONS			
REV	DESCRIPTION	DATE	APPROVED
A	INITIAL DRAFT - FIRST RELEASE	13/10/2005	GS
B	SECOND RELEASE	--/--/--	GS
	LAST MODIFIED	13/10/2005	

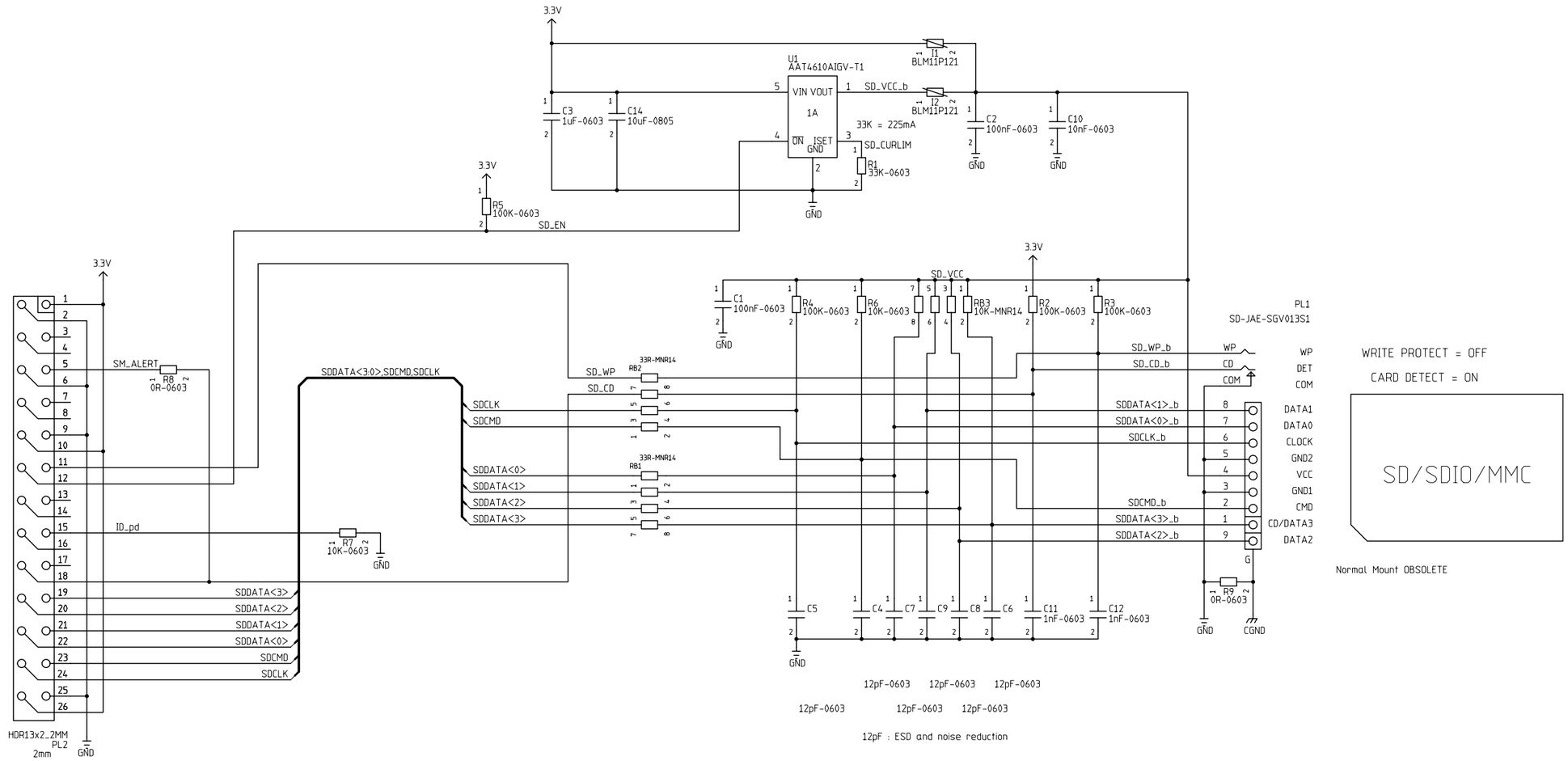

P1 Fiducial-R50

P3 Fiducial-R50

P2 Fiducial-R50

H2 TOOL-M3.2 Tool hole M3.2/0.127 NPTH HOLE

H1 TOOL-M3.2 Tool hole M3.2/0.127 NPTH HOLE

H3 TOOL-M3.2 Tool hole M3.2/0.127 NPTH HOLE

CONTRACT NO.		SIMTEC ELECTRONICS Avondale Drive,Tarleton, PR4 6AX, UK
APPROVALS	DATE	EB2410 SDIO/MMC
DRAWN GS	13/10/2005	
CHECKED		SIZE C / FSCM NO. / DWG. NO. / REV A
ISSUED		
(c) SIMTEC ELECTRONICS		SCALE --- / PRINTED 13/10/2005 / SHEET 01

H=4ND; V=4LA