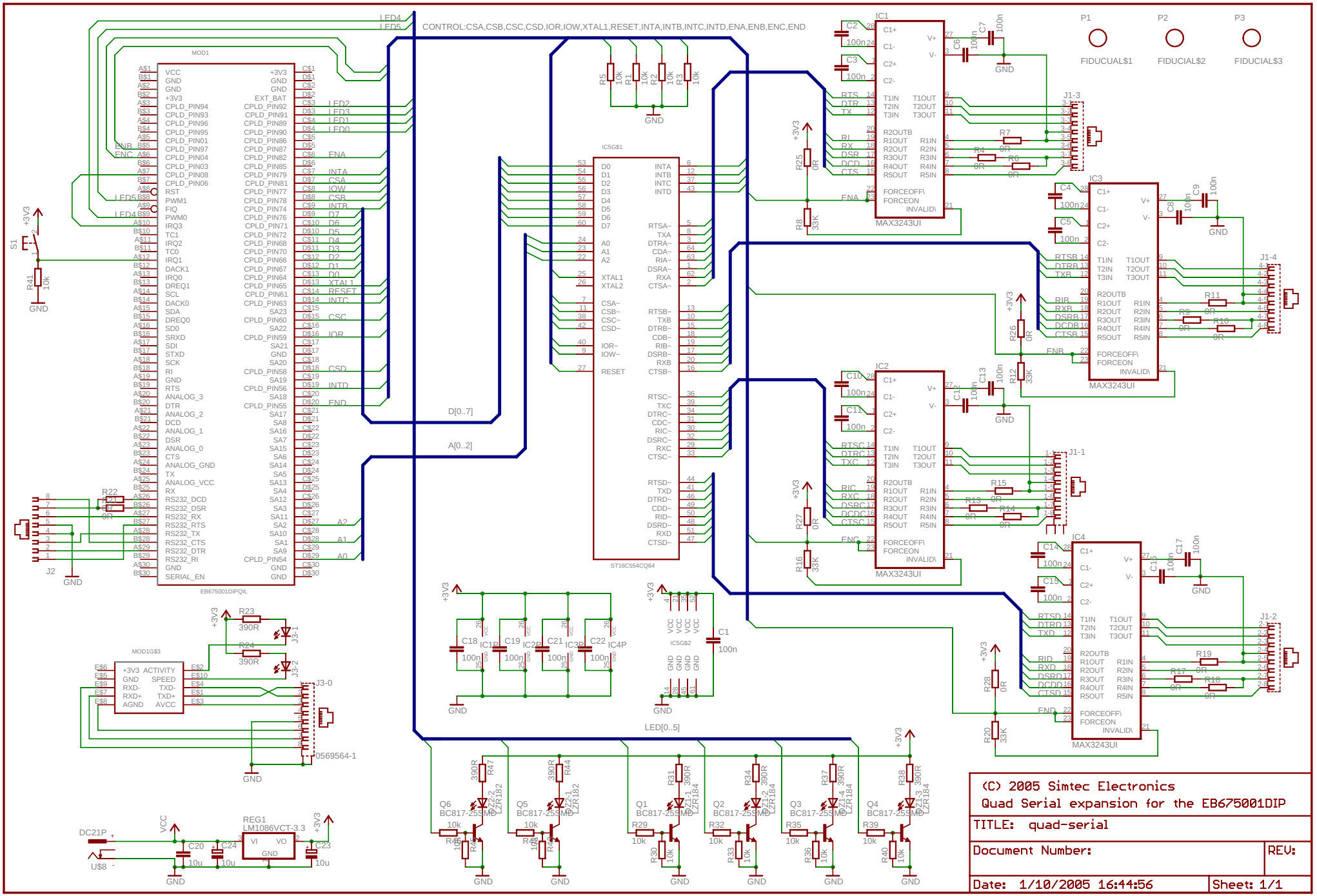

(C) 2005 Simtec Electronics
Quad Serial expansion for the EB675001DIP

TITLE: quad-serial

Document Number:

REV:

Date: 1/10/2005 16:44:56

Sheet: 1/1